STRIKE LOCATIONS-DOORS/FRAMES -ALL SERIES

STANDARD STRIKE LOCATIONS ABOVE FINISHED FLOORS.

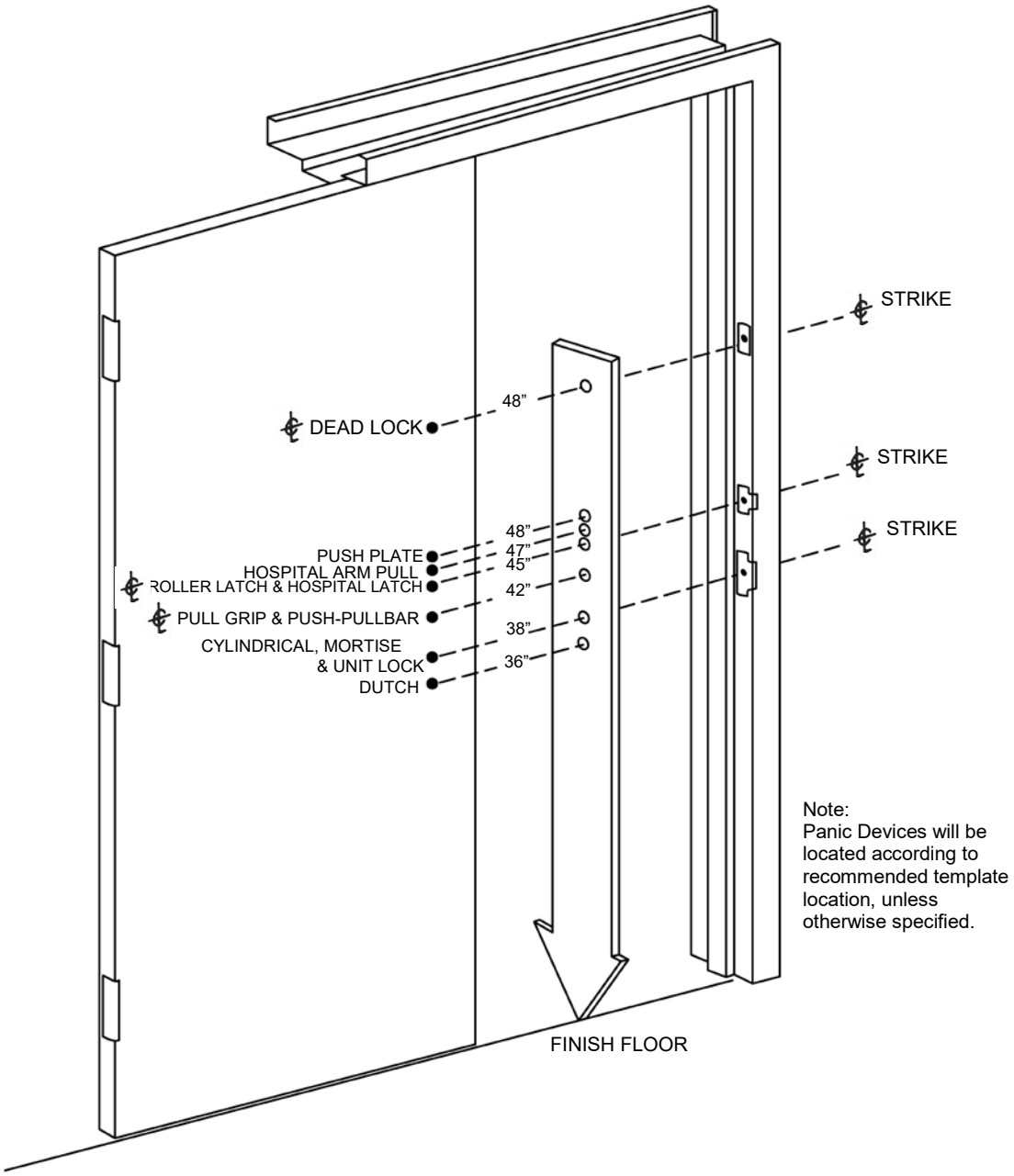

Note:
Panic Devices will be located according to recommended template location, unless otherwise specified.

© 2018 Pioneer Industries.